UTILITY CONNECTIONS		
ITEM	DESCRIPTION	QTY.
E	EXHAUST FAN CONN. 14" DIA.	(2) PLC.
G	NATURAL GAS CONN. " DIA. NPT.	(1) PLC.
GV	GAS VENT CONN. 1" DIA. NPT.	(4) PLC.

DRY OFF OVEN (FM INSURANCE REQUIREMENTS)

OVEN NOTES

OPERATING TEMPERATURE 250° MAXIMUM TEMPERATURE 400°
HEAT SOURCE NATURAL GAS @ 3 PSI QUANTITY 1500 CFH
SOLVENT LOAD N/A TYPE SOLVENT NONE
CONTINUOUS OVEN ☒ BATCH OVEN ☐
PURGE TIME XX MINS. LOAD PER HOUR 7200 LBS. LOAD PER BATCH
EXHAUST @ 70°F 1000 CFM EXHAUST @ MAX. TEMP. X SCFM
POWER-MAIN 480-3-60 CONTROL 120-1-60
CONTROL CABINET ☒ CABINET WIRING BY C.I.M.
OVEN WIRING BY C.I.M. TO POWER SOURCE BY OTHERS
OVEN PIPING BY C.I.M. TO FUEL SOURCE BY OTHERS
EXHAUST STACK SIZE #14" GAUGE #18 BY OTHERS
AIR SEAL STACK(S) SIZE GAUGE #18 BY OTHERS
EXHAUST DAMPER W/STACK ☒ ON MACHINE ☒ PERCENT 75%
AIR SEAL DAMPER W/ STACK ☐ ON MACHINE ☐ PERCENT
OVEN HOUSING 6" " THICK MINERAL WOOL INSULATED PANELS
PANEL WALLS MILD STL. ☐ GALVANIZED 1 SIDE ☐ ALUMINIZED STL. ☒
DUCTS MILD STL. ☐ ALUMINIZED ☒ OTHER
PANEL GAUGE #20 DUCT GAUGE #16 & #18
PAINTING: PANELS UNPAINTED ☒ SHOP PAINT EXTERIOR
OVEN ERECTION BY C.I.M. SHOP PAINT INTERIOR HI-TEMP ALUMINUM PAINT
CONVEYOR TYPE 3" I-BEAM
CONVEYOR SPEED 8 FPM VARIABLE
CONVEYOR BY C.I.M.
EXPLOSION RELIEF AREA
OVEN VOLUME 4988 CU.FT.÷15= 332 SQ. FT. EXPLOSION
RELIEF AREA MINIMUM.
ACTUAL EXPLOSION RELIEF AREA DOORS 15 SQ. FT.
EXPLOSION RELIEF AREA CONVEYOR OPENINGS 33 SQ. FT.
EXPLOSION RELIEF AREA PANELS 285 SQ. FT.
TOTAL ACTUAL SQ. FT. 332 SQ. FT.

CURE OVEN (FM INSURANCE REQUIREMENTS)

OVEN NOTES

OPERATING TEMPERATURE 450° MAXIMUM TEMPERATURE 500°
HEAT SOURCE NATURAL GAS @ 3 PSI QUANTITY 2500 CFH
SOLVENT LOAD N/A TYPE SOLVENT NONE
CONTINUOUS OVEN ☒ BATCH OVEN ☐
PURGE TIME XX MINS. LOAD PER HOUR 7200 LBS. LOAD PER BATCH
EXHAUST @ 70°F 1545 CFM EXHAUST @ MAX. TEMP. X SCFM
POWER-MAIN 480-3-60 CONTROL 120-1-60
CONTROL CABINET ☒ CABINET WIRING BY C.I.M.
OVEN WIRING BY C.I.M. TO POWER SOURCE BY OTHERS
OVEN PIPING BY C.I.M. TO FUEL SOURCE BY OTHERS
EXHAUST STACK SIZE #14" GAUGE #18 BY OTHERS
AIR SEAL STACK(S) SIZE GAUGE #18 BY OTHERS
EXHAUST DAMPER W/STACK ☒ ON MACHINE ☒ PERCENT 75%
AIR SEAL DAMPER W/ STACK ☐ ON MACHINE ☐ PERCENT
OVEN HOUSING 6" " THICK MINERAL WOOL INSULATED PANELS
PANEL WALLS MILD STL. ☐ GALVANIZED 1 SIDE ☐ ALUMINIZED STL. ☒
DUCTS MILD STL. ☐ ALUMINIZED ☒ OTHER
PANEL GAUGE #20 DUCT GAUGE #16 & #18
PAINTING: PANELS UNPAINTED ☒ SHOP PAINT EXTERIOR
OVEN ERECTION BY C.I.M. SHOP PAINT INTERIOR HI-TEMP ALUMINUM PAINT
CONVEYOR TYPE 3" I-BEAM
CONVEYOR SPEED 8 FPM VARIABLE
CONVEYOR BY C.I.M.
EXPLOSION RELIEF AREA
OVEN VOLUME 8880 CU.FT.÷15= 592 SQ. FT. EXPLOSION
RELIEF AREA MINIMUM.
ACTUAL EXPLOSION RELIEF AREA DOORS 15 SQ. FT.
EXPLOSION RELIEF AREA CONVEYOR OPENINGS 33 SQ. FT.
EXPLOSION RELIEF AREA PANELS 544 SQ. FT.
TOTAL ACTUAL SQ. FT. 592 SQ. FT.

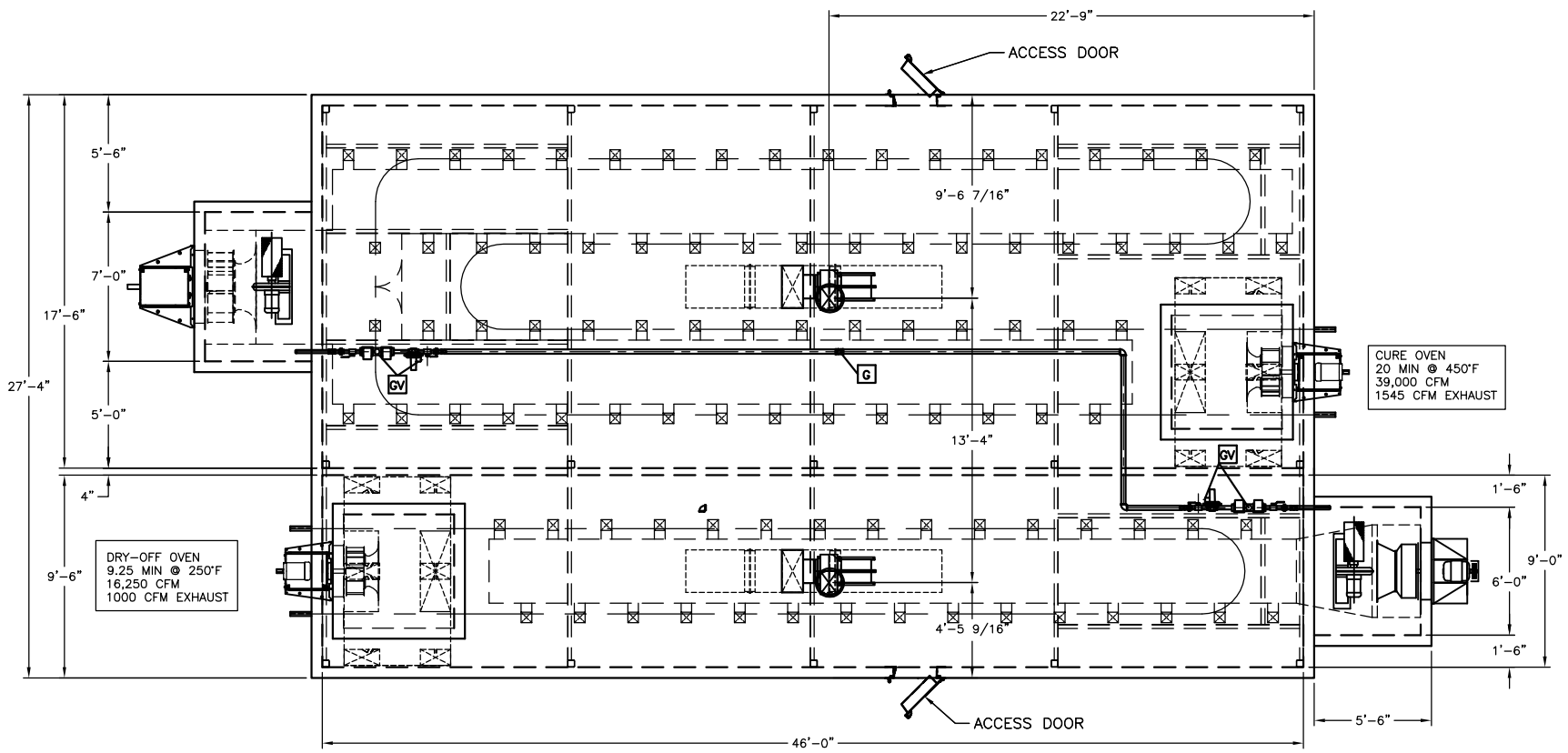

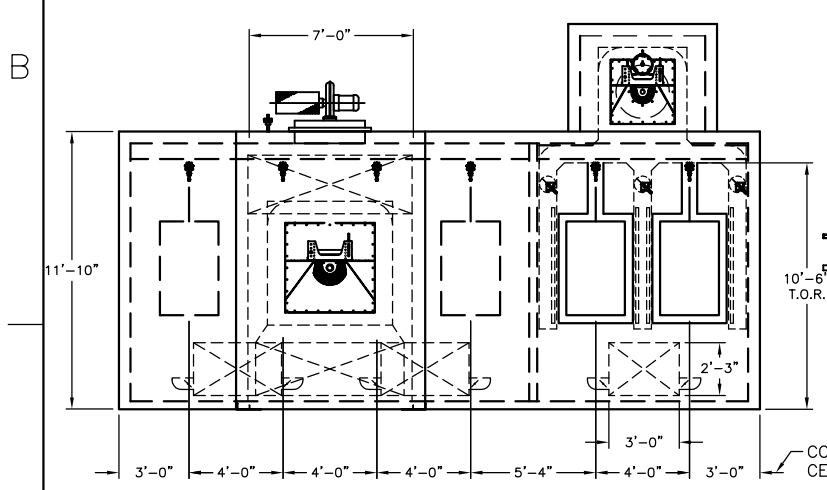

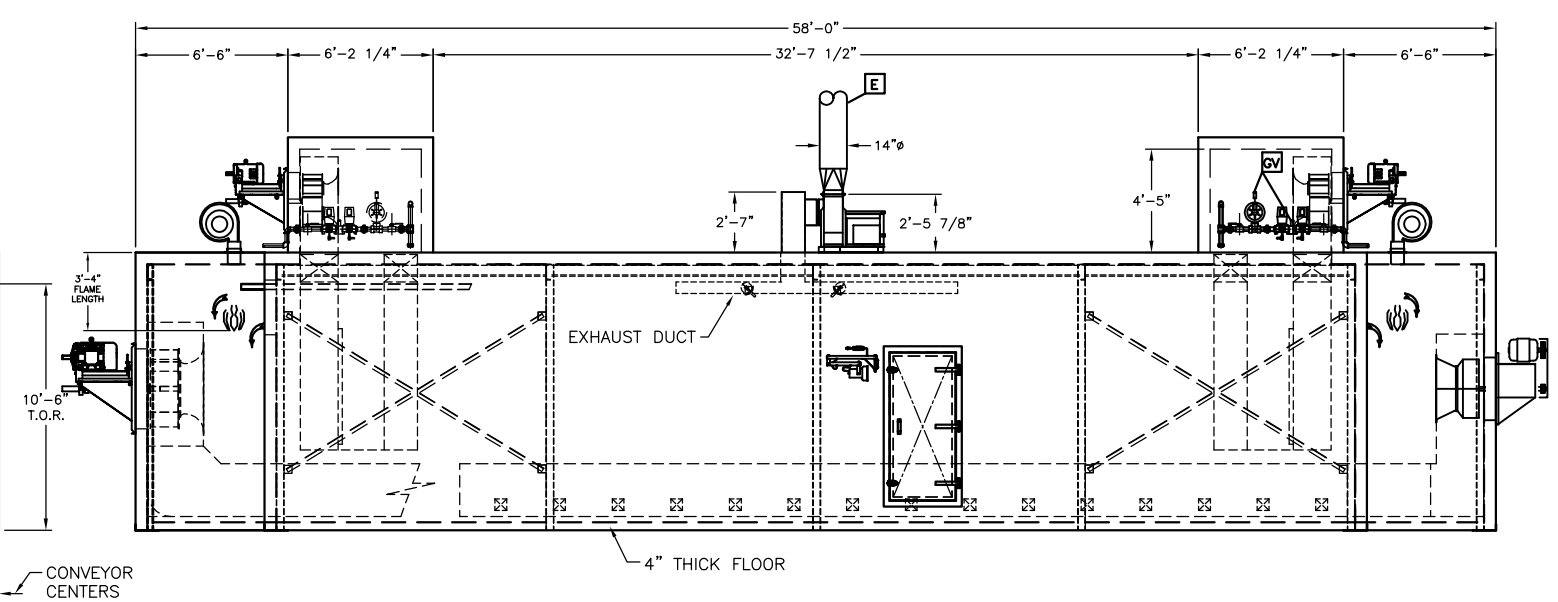

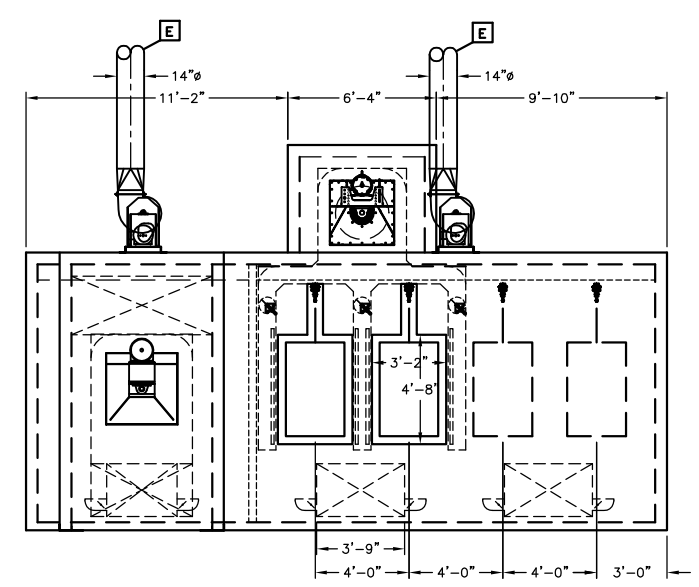

APPROVAL

THIS PRINT TO BE RETURNED APPROVED AS TO GENERAL DESIGN, DIMENSIONS AND ARRANGEMENTS.

APPROVED BY: _____
COMPANY: Monessen Hearth
DATE: _____

SERIAL# S-0545 | WORK ORDER: 1546.2

CONFIDENTIAL PROPRIETARY NOTICE

THIS DRAWING, THESE SPECIFICATIONS, AND THE IDEAS CONTAINED HEREIN ARE THE EXCLUSIVE PROPERTY OF ARMOR METAL GROUP ("AMG") AND SHALL BE RETURNED UPON DEMAND. NO PERSON SHALL COPY, USE OR DISCLOSE THIS DRAWING, THESE SPECIFICATIONS, OR THE IDEAS CONTAINED HEREIN, WITHOUT THE EXPRESS CONSENT OF AMG.

ARMOR METAL GROUP
www.armormetal.com

CINCINNATI INDUSTRIAL MACHINERY
AN ARMOR METAL GROUP COMPANY CINCINNATI, OHIO

TITLE DRY OFF & CURE OVEN ASSEMBLY
FOR MONESSEN
DATE 03/29/2006 DWN. BY jkelley
SCALE 1/4"=1'0" DWG. NO.
3RD ANGLE CHK. BY _____ 1546-201

PLOT STAMP: 4/3/2006 8:27 AM

N:\Current Jobs\CNI Product Eng\1546 Monessen Hearth Systems\1546.2.3 Dry Off & Cure Oven Oven\1546-201 Dry Off & Cure Oven Assembly.dwg