REVISIONS	BY	DATE
0001	N.L	01/06/06

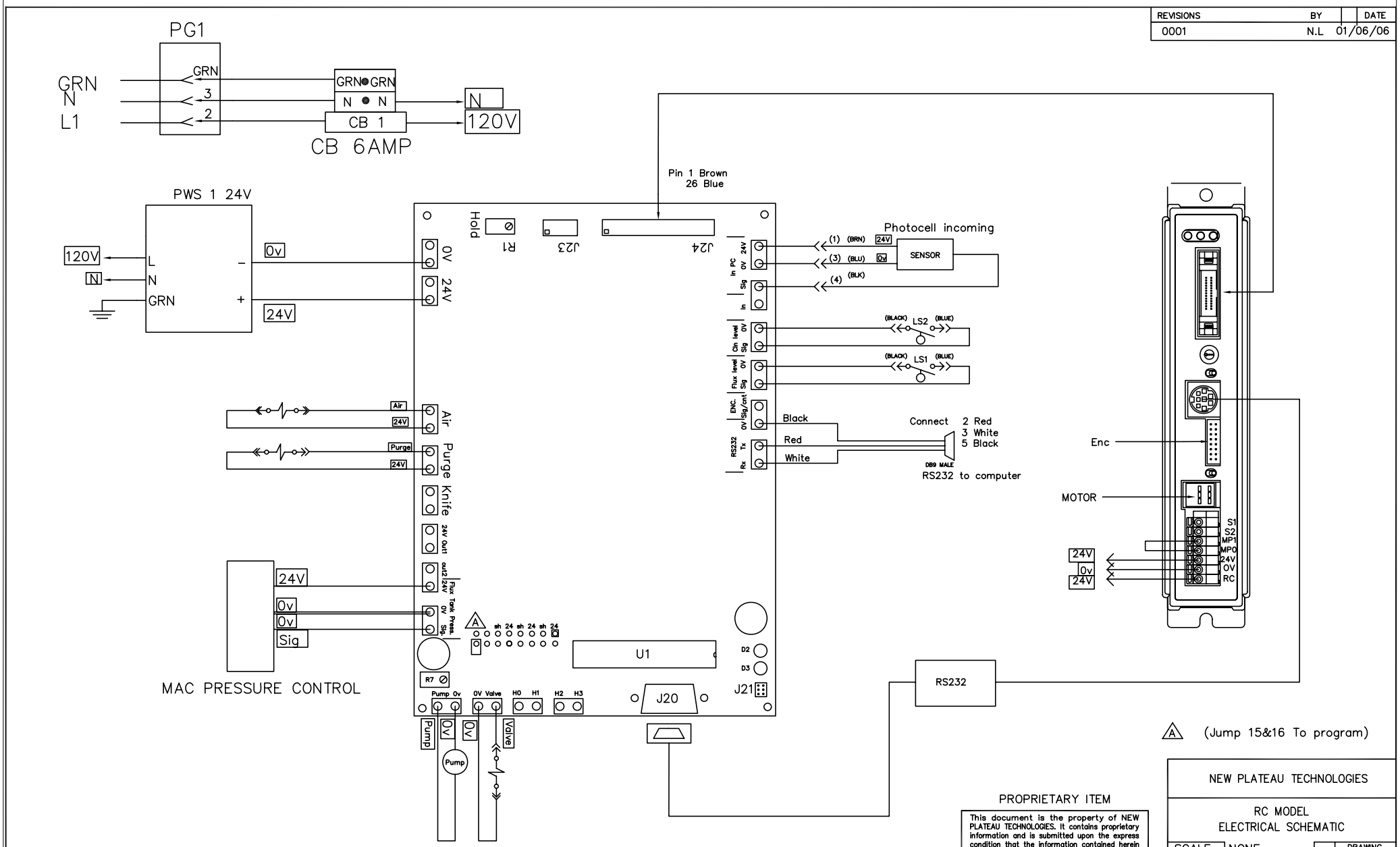

(Jump 15&16 To program)

PROPRIETARY ITEM

This document is the property of NEW PLATEAU TECHNOLOGIES. It contains proprietary information and is submitted upon the express condition that the information contained herein will not be used directly or indirectly in any way detrimental to the interest of NEW PLATEAU TECHNOLOGIES.
ALL RIGHTS RESERVED.

NEW PLATEAU TECHNOLOGIES

RC MODEL
ELECTRICAL SCHEMATIC

		SIZE	DRAWING NUMBER
SCALE	NONE	D	SSE001
DATE	01/06/06		
DRAWN	N.L		
SHEET	1 OF 1		